ROUGH DIMENSIONS	890/SM2241 - STOCK CART - 6 WHEEL	PAGE#	OF
		1	1

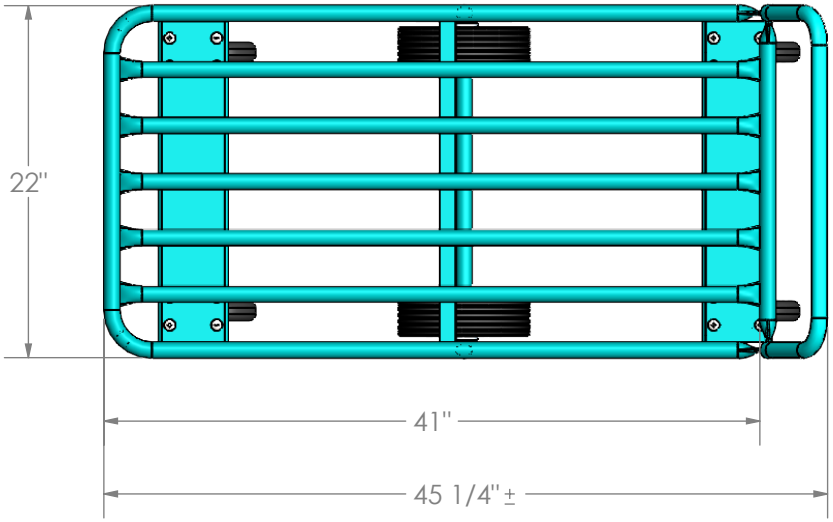

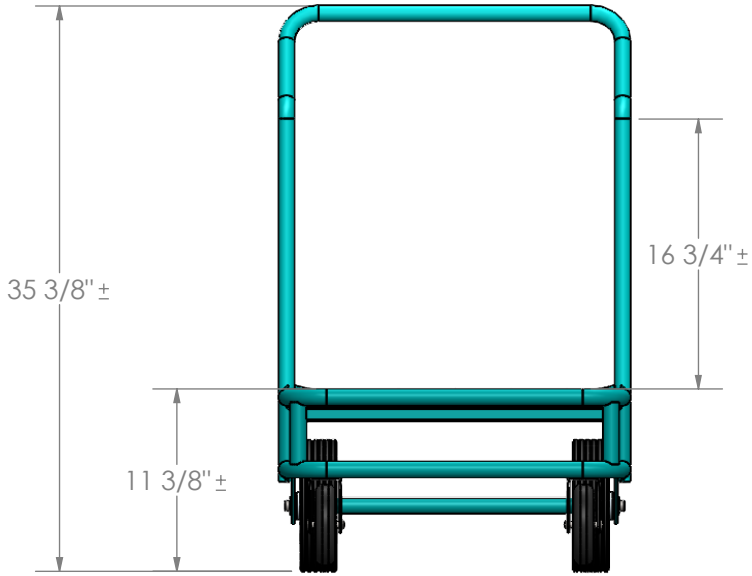

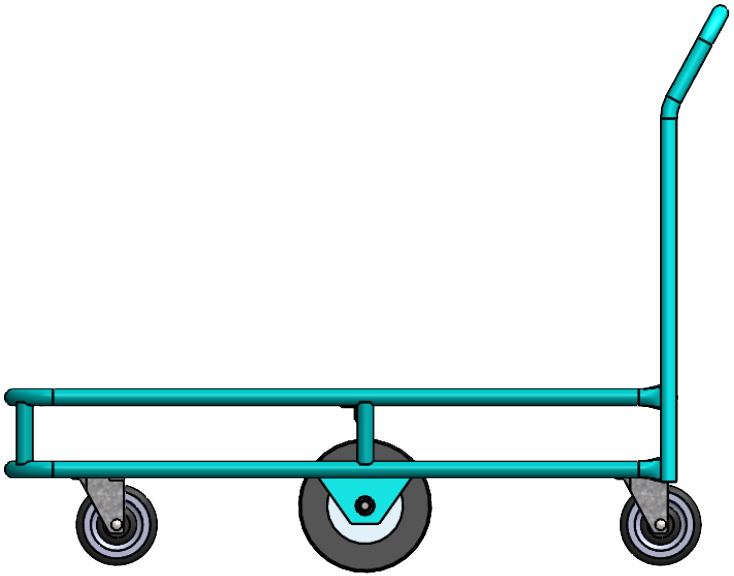

Unitran Manufacturers	PROPRIETARY AND CONFIDENTIAL THE INFORMATION CONTAINED IN THIS DRAWING IS THE SOLE PROPERTY OF Unitran Manufacturers Ltd. ANY REPRODUCTION IN PART OR AS A WHOLE WITHOUT THE WRITTEN PERMISSION OF Unitran Manufacturers Ltd. IS PROHIBITED.		NAME	DATE	DWG. NO.	REV.		NAME	DATE
		DRAWN	Dean S.	9/12/25	U-3429		APPROV.		