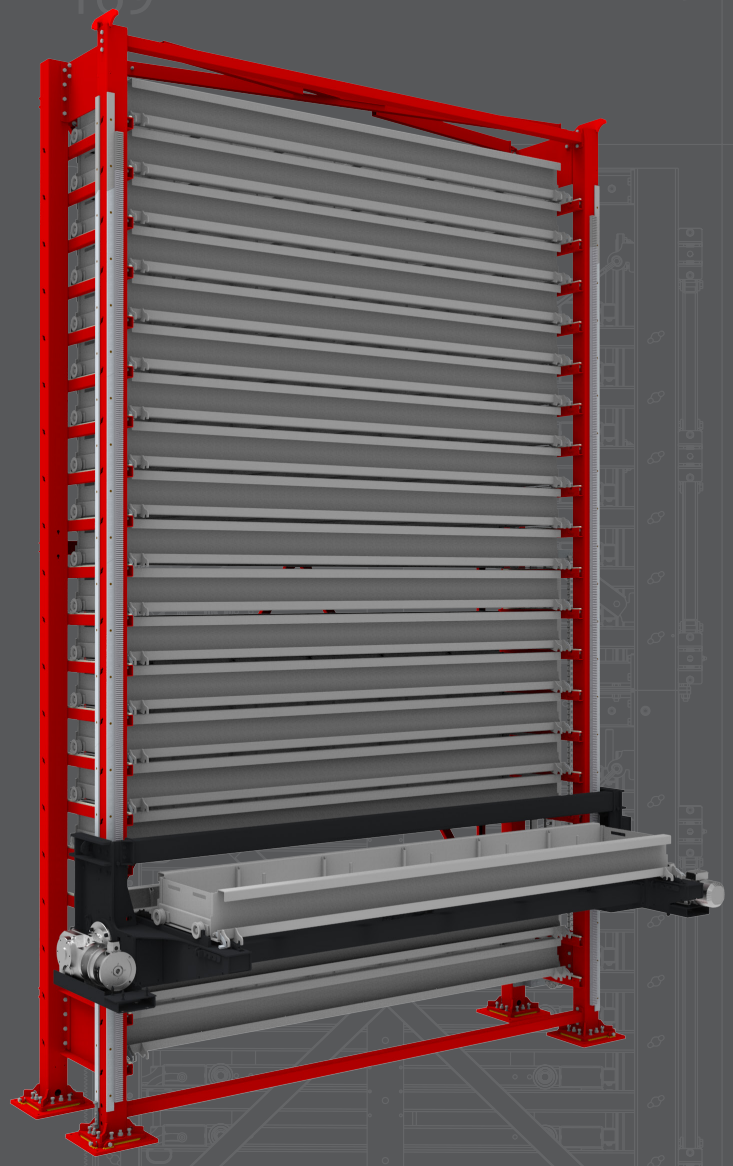

VIDIR
vertical storage solutions

# BAR STOCK VLS

Vidir's Bar Stock / Linear Vertical Lift System (VLS) is an automated storage and retrieval system (AS/AR) that utilizes an elevator to climb the front of the tower to deposit and retrieve drawers weighing up to 5,000 lbs and deliver them directly to ground level for further processing, increasing material storage and flow. The result is a safe and effective storage system designed to SIL3 / CAT4 / PL e safety standards that will save valuable floor space, eliminate redundant processes, and improve workplace safety.

- **Save floor space and increase storage capacity by utilizing overhead space**
- **Meets SIL3 / CAT4 / PL e safety standards**
- **Contained storage environment prevents material damage**
- **Automated storage eliminates forklift requirement during normal operation**
- **Quick access to material**
- **Eliminate disruption in adjacent work cells caused by forklift operation**
- **Reduce material retrieval times by up to 75%**

## HOW TO LOAD

1. Load an empty drawer on the elevator and return to home position.

2. Load the bar stock material in the drawer using a forklift or overhead crane.

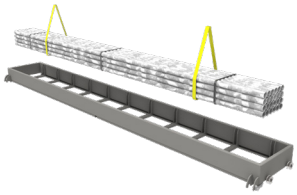

3. Remove straps or chains from the bar stock bundle via the openings in the bottom of the drawer.

4. Direct the elevator to the desired position.

**Safe Handling • Easy Access • Maximum Storage • Fast Retrieval • Small Footprint**

**Toll Free: 800.210.0141 www.vidirsolutions.com**

# FEATURES & BENEFITS

VIDIR
vertical storage solutions

**1 Overhead Space**
Fully maximizes overhead space for storage to recover valuable floor space.

**2 Load Size**
Up to 5,000 lbs.

**3 Overload Sensing**
Lift returns to the home position when overloaded.

**4 Braking System**
Features a process brake and a redundant brake engaged with the safety system.

**5 Emergency Stops**
Located left and right of the tower.

**6 Controls**
Touch screen controller featuring drawer selection.

**7 Motors**
2 x SEW KAF87 5hp motors & 1 x SEW KAF47 3/4hp

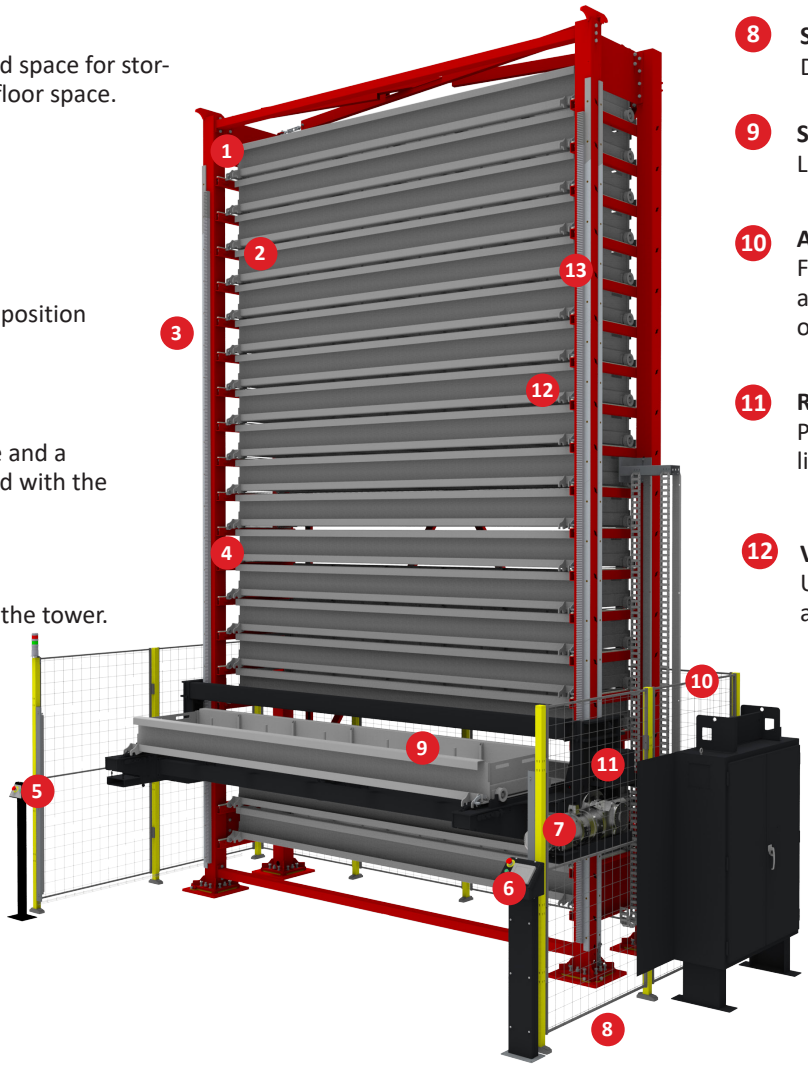


**8 Safety System**
Designed to SIL3/C14/PL e.

**9 Semi Open Drawer Bottoms**
Lower load in using straps.

**10 Access Restriction**
Fencing around the perimeter and light curtains provide safe operation.

**11 Rack & Pinion Drive System**
Precisely aligns and balances lift automatically.

**12 Variety of Drawer Sizes**
Up to 24' lengths with various available drawer heights.

**13 Drawer Safety**
Each pallet is individually locked in place until released by the elevator.

# SPECIFICATIONS

| TECHNICAL SPECIFICATIONS | IMPERIAL | METRIC |
|---|---|---|
| **ELEVATOR SPECIFICATIONS** | | |
| Storage Width | 120" - 294" | 3,048 mm - 7,468 mm |
| Storage Depth | 24" | 610 mm |
| Max Height per Drawer | 10" - 18" | 254 mm - 457 mm |
| Max Load per Drawer | 5,000 lbs | 2,268 kg |
| Lifting Speed | 22 ft/min | 6.7 m/min |
| **TOWER SPECIFICATIONS** | | |
| System Height | 12' - 28' | 3.65 m - 8.5 m |

## DRAWER CONFIGURATION

The Vertical Lift for bar stock and linear materials is adaptable, and can accomodate a multitude of sizes and applications. The drawers are designed to accept linear objects such as bar stock, pipes, and beams. They can also accept custom inserts to accommodate materials of varying dimensions.

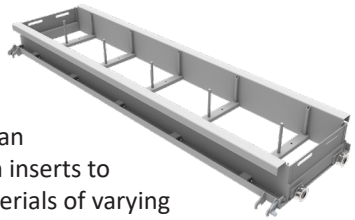

**Safe Handling • Easy Access • Maximum Storage • Fast Retrieval • Small Footprint**

Toll Free: 800.210.0141 www.vidirsolutions.com

BSVLS2022R00